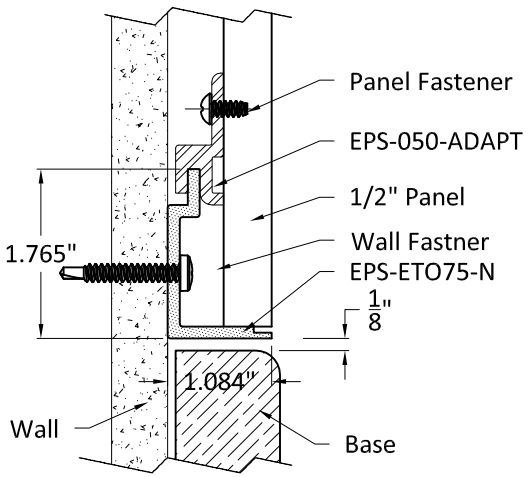

BOTTOM EDGE SCALE 1:2

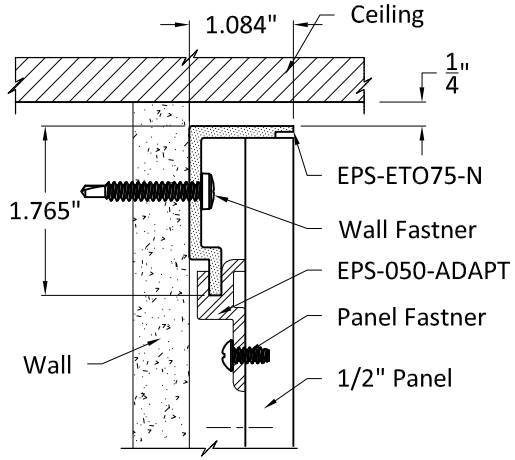

TOP EDGE

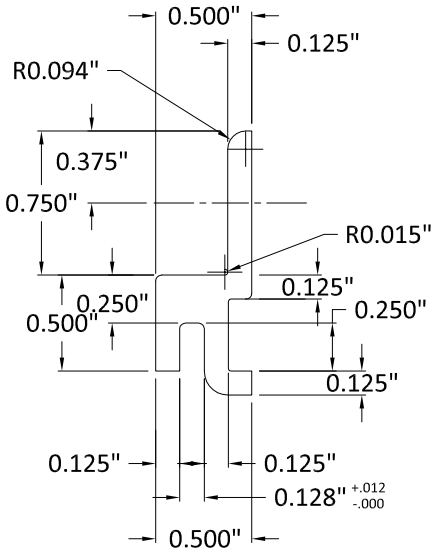

SCALE 1:1

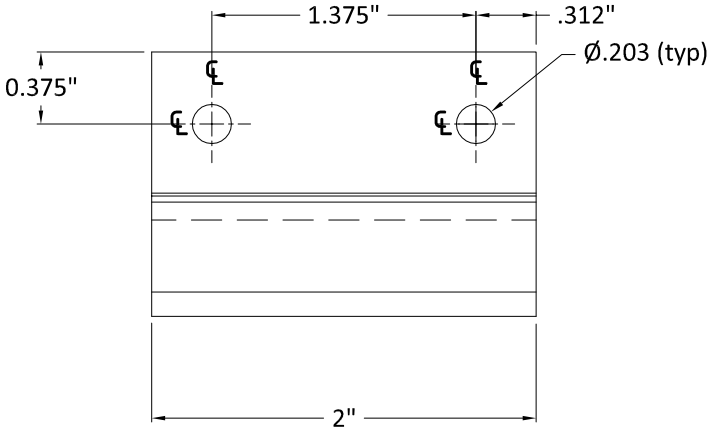

SCALE 1:1

PROPRIETARY AND CONFIDENTIAL

THE INFORMATION CONTAINED IN THIS DRAWING IS THE SOLE PROPERTY OF MONARCH METAL FABRICATION. ANY REPRODUCTION IN PART OR AS A WHOLE WITHOUT THE WRITTEN PERMISSION OF MONARCH METAL FABRICATION IS PROHIBITED.

MATERIAL
Aluminum

FINISH
Mill

DO NOT SCALE DRAWING

	NAME	DATE
DRAWN	RIKKI	07/16/19
CHECKED	CHRIS	

MONARCH METAL FABRICATION

TITLE:
ADAPTOR CLIP ON ½" PANEL

SIZE	DWG. NO.	REV
A4	EPS-050-ADAPT	B

SCALE: 1:1,1:2 | WEIGHT: ≈ 0.057 lbs | SHEET 1 OF 1